BLE to UART Module BLE-SER

Manual

Version: 1D

http://wch.cn

1. Overview

The BLE to UART module (BLE-SER) is developed based on CH9140, which supports BLE4.2. The baud rate is up to 1Mbps. The module supports *Bluetooth*® Low Energy (BLE) master-slave mode and slave mode, and it supports automatic connection and binding in master-slave mode.

Providing PC-side virtual serial driver can directly call Bluetooth interface through the serial port, which is compatible with serial debug applications, so it can communicate with UART with no secondary development required, easily implementing the exemption of wire plugging and not being limited by cable distance.

BLE-SER appearance:

Some application block diagrams of CH9140:

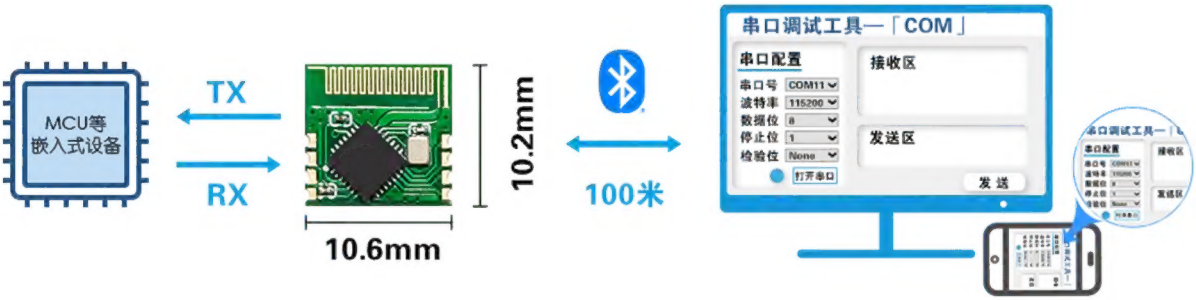

Figure 1 Block diagram of serial communication between BLE host and UART device through CH9140

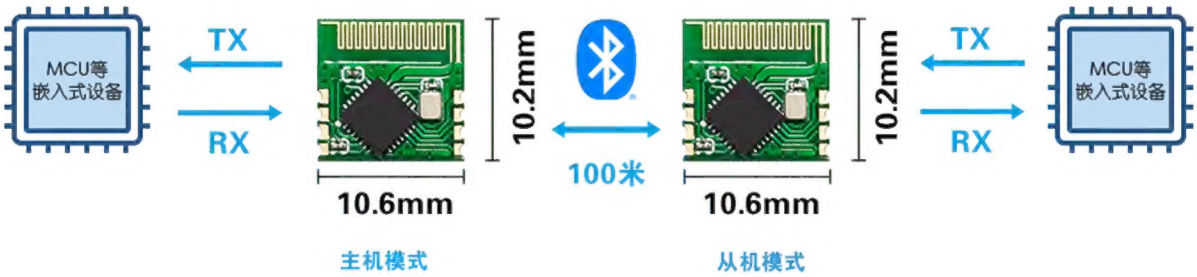

Figure 2 Block diagram of communication between MCUs or UART devices through CH9140 in BLE master-slave mode

2. Features

- Provides PC-side BLE virtual serial port driver.
- Compatible with existing serial software and tools, without secondary development.
- Supports connection to BLE host in Windows/Linux/Android/iOS and other systems.
- Supports BLE master-slave mode and slave mode.
- Supports automatic connection and binding in BLE master-slave mode.
- Supports configure parameters by hardware.
- Transmission distance: 100 meters.
- Adjustable 8 positions of TX power.
- Power-off sleep current is 0.3uA.
- Supports 3.3V and 2.5V operating voltages.
- Asynchronous serial port default baud rate is 115200bps.
- Serial port supports MODEM signals: RTS and CTS.
- Serial port supports odd, even, no parity, space 0 and mark 1.
- Supports obtain the chip supply voltage parameters.

3. Package size and pins of BLE-SER-A

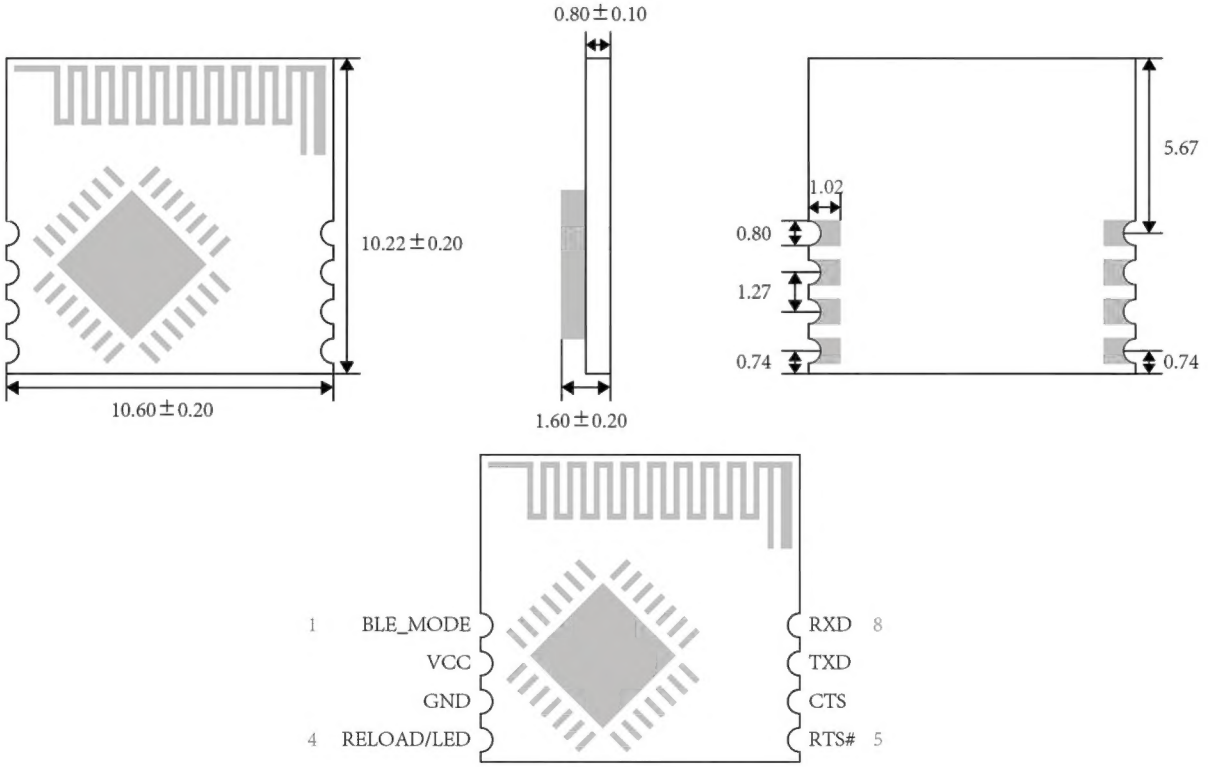

Pin No.	Pin Name	Pin Type	Description
1	BLE_MODE	I	BLE mode setting, with built-in pull-up resistor Low level: Master-slave mode. High level: Slave mode
2	VCC	P	Power input
3	GND	P	Ground

4	RELOAD /LED	I/O	Restore factory setting input pin (RELOAD) when powered on, Restore the factory settings after a low level is detected for 2 seconds continuously. Chip status indication signal output pin (LED) after powered on, active low.
5	RTS#	O	MODEM output signal, request to send, active low.
6	CTS	I	MODEM input signal, clear to send, active low.
7	TXD	O	UART transmit pin
8	RXD	I	UART receive pin

Note: P: Power. I: Input. O: Output

4. Recommended bonding pad size for BLE-SER-A

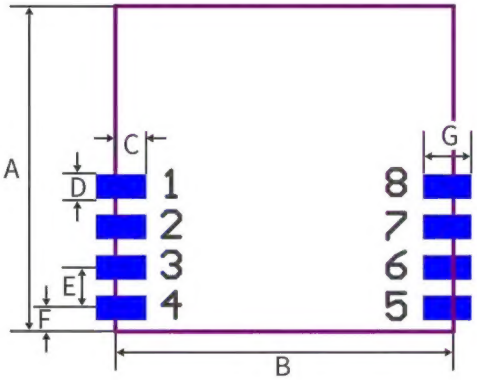

Symbol	Value	Unit
A	10.22	mm
B	10.6	
C	1.02	
D	0.8	
E	1.27	
F	0.74	
G	1.7	

5. Layout

The upper part of the module is the on-board antenna, and the layout of antenna is related to quality of wireless communication. Good communication quality can ensure a stable data transmission rate. The module can run separately without extra ground plane, but when it is installed on the other PCB, it should be noted: Antenna area must be far away from other metal components, and the distance must be greater than 20mm. Any conductor close to the antenna may seriously affect the antenna radiation pattern.

The figure below shows the reference layout of the module. The first three cases are correct, as long as the ground plane does not exceed the ground plane edge of the module. The last three cases are incorrect. The example on the left is incorrect because there is a ground plane under the antenna, the middle example is incorrect because there is not enough gap around the antenna, and the last example is incorrect because battery metal casing is not far away from antenna area.

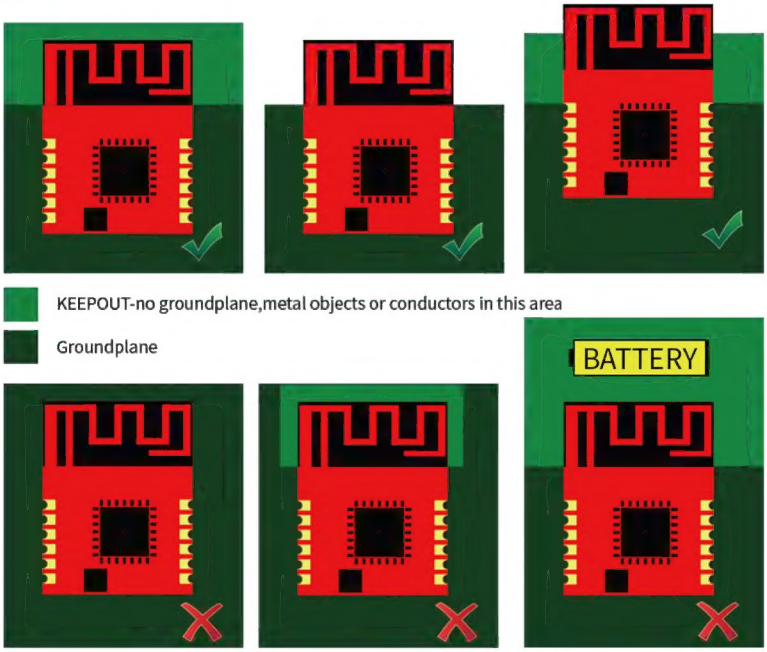

6. Functional description

6.1. Smart pairing

When the BLE-SER module is in master-slave mode, it can be paired with the designated CH9140/CH9143 without inputting MAC address through AT command. After successful pairing, the two will establish a binding relationship, and there is no need to re-pair when connecting again.

Pairing procedure:

1) The CH9140 is in master-slave mode, and the CH9140/CH9143 is in slave mode or master-slave mode;
2) Both sides need to complete power-up within 3s to establish a pairing;
3) The indicator LED flashes 3 times and then keeps on, indicating that pairing is successful.

If the user needs to re-establish the pairing, repeat the pairing process again. The difference is that the indicator LED in step 3 will flash quickly. In this case, the pairing can be re-established by powering up the chip or module.

6.2. Serial transparent transmission function

A UART is used for serial transparent transmission. The default setting is 115200bit/s baud rate, 8 data bits, 1 stop bit, no parity and enabled flow control. The UART receive and transmit buffers of the chip are each 1K bytes, and UART will perform BLE transmission in real time while receiving data. BLE communication rate is related to its environment, so it is recommended to use CTS/RTS flow control to prevent buffer overflow when BLE average RSSI is less than -70dBm. But when the communication quality is poor and the chip UART receiving speed is greater than 2KB/s, it is recommended to use CTS/RTS flow control to prevent buffer overflow.

6.3. LED function

List of LED status description

No.	Status	Description
1	once quickly flashes 3 times after powered on	currently in slave mode
2	twice quickly flashes 3 times after powered on	currently in master-slave mode
3	slowly flashes at 500ms intervals	currently in broadcast status
4	keeps on	currently in connection status
5	quickly flashes in connection status	currently performing data transmission
6	quickly flashes in pairing process	has been paired with other devices, need power-up again to complete pairing

For details, please refer to CH9140 datasheet.

7. Schematic diagram for reference

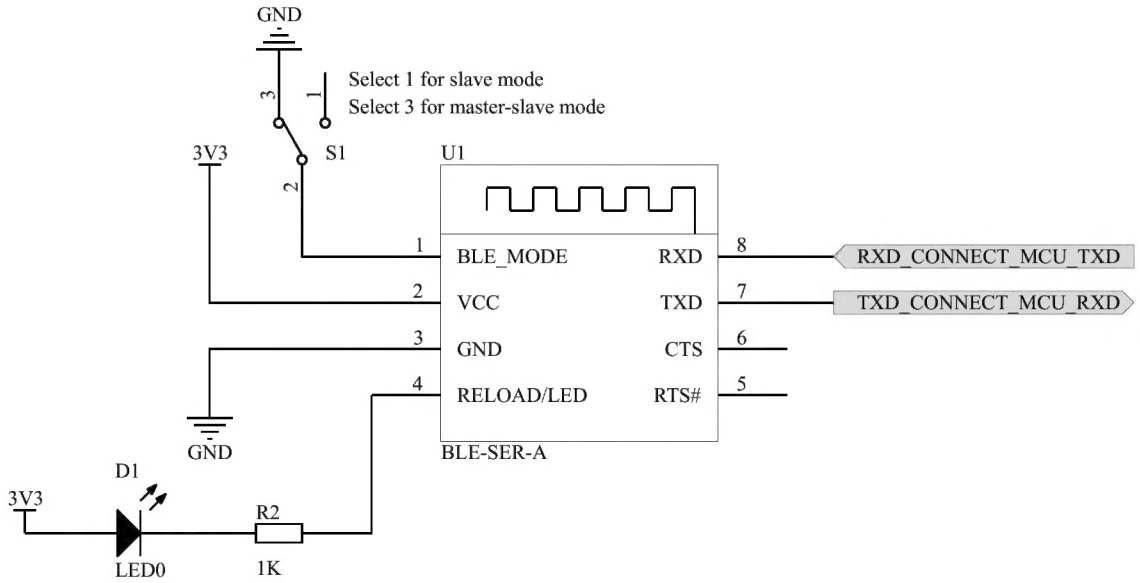

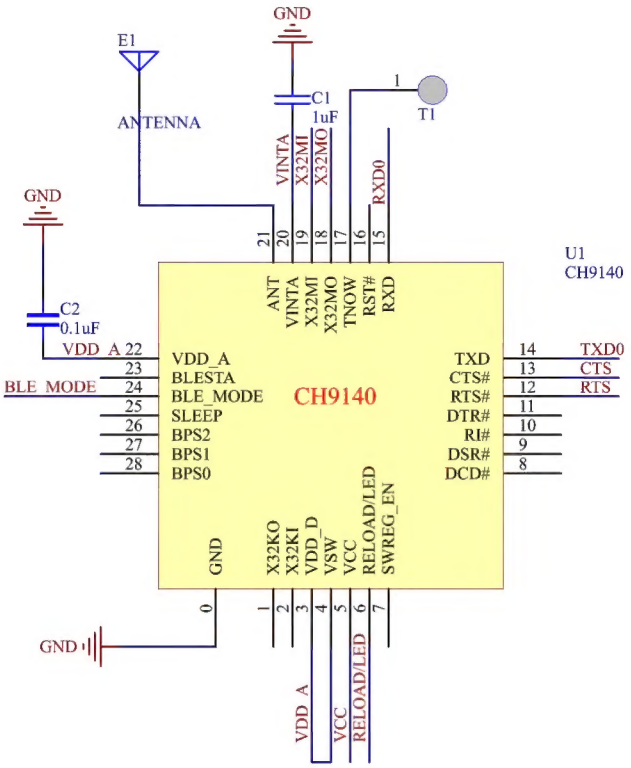

8. Reflow soldering conditions

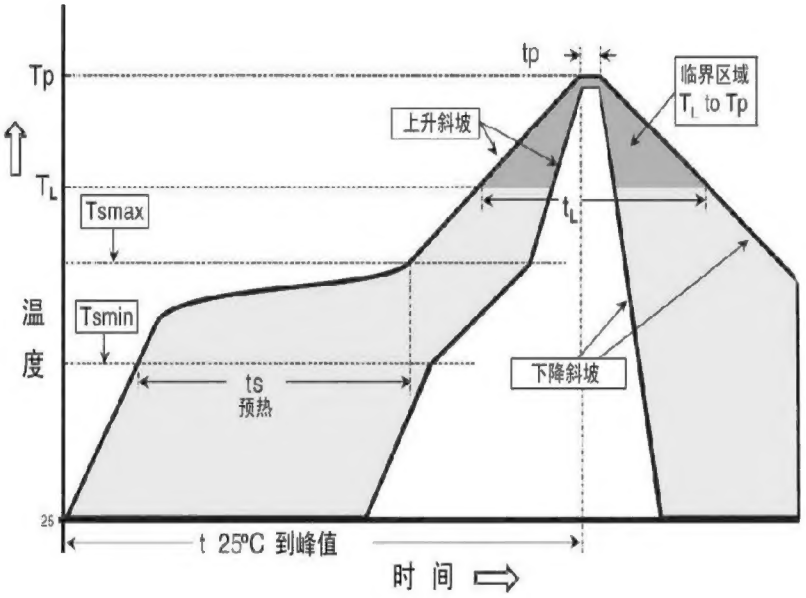

Moisture Sensitivity Level	MSL3
Average slope rise rate (TL to TP)	Maximum 3°C/s
During warm up Minimum temperature(Tsmin) Maximum temperature(Tsmax) Time (minimum –maximum)(ts)	 150°C 200°C 60-180s
Tsmax – TLslope rise rate	Maximum 3°C/s
During hold Temperature (TL) Time (tL)	 217°C 60-150s
Peak temperature (Tp)	260+0/-5°C
Time when actual peak temperature is within 5°C(tp)	20-40s
Slope descent rate	Maximum 6°C/s
Time from 25°Cto peak temperature	Maximum 8 min